LEGI JEDAN ORIGINALNI SISTEM

Barijere pristupa i parking rampe

LEGI SISTEM OGRADA

LEGI - SGS d.o.o.je deo nemačke kompanije LEGI, osnovane u Moersu 1949. godine.
Kompanija se bavi proizvodnjom i ugradnjom vrhunskih ogradnih sistema.

Naš asortiman čine:

–Ograde(klasične, ukrasne, sportske, kvatro, 3D i dr.)
–Kapije(jednokrilne, dvokrilne, klizne i samonosive)
–Gabioni(Rubix i Hexa)
–Rešetke, gazišta, stepenici
–Automatske rampe, jarboli
–Profi li- setovi za samonosive kapije

LEGI proizvodi su toplocinkovani prema EN ISO 1461normi, sa garancijom protiv korozije od minimum 20 godina i po želji plastifi cirani sa UV bojom prema sledećoj RAL paleti boja:

SF1 RAL 6005 – močvarno zelena
RAL 6009 – tamno zelena
RAL 7016 – antracit siva

SF2 RAL 9010 – bela
RAL 9005 – crna
RAL 7023 – beton siva
RAL 7030 – kamen siva

SF3 RAL 5010 – plava
RAL 3000 – crvena

Barijere i kontrole pristupa

U barijere pored klasičnih kapija spadaju rampe, potapajući stubovi, tripod i turniket barijere sve od kontrole pristupa pešaka do kontrole kamionskog saobraćaja.

Perimetarsko ograđivanje

Da bi ponuda perimetarskog ograđivanja bila kompletna, izabrali smo najbolje od najboljih proizvođača barijera i kontrola pristupa, gde takođe dajemo akcenat na kvalitetan servis i dostupnost svih neophodnih rezervnih delova kad istekne garancija proizvoda.

Parkirne rampe

Automatska (parkirna) rampa najjednostavniji je i najekonomičniji sistem za regulisanje neautorizovanog ulaska na rezervisane parking prostore (privatni, komercijalni ili industrijski).

Vitko kućište rampe AURIS je tako konstruisano da zauzima malo prostora, pa je time pogodno za ugradnju na uskim i nepristupačnim mestima. Elektromotorni pogon postoji u dve verzije, za intenzivnu upotrebu do 24 V i nešto manji intenzitet upotrebe 230 V.

Propratni proizvodi

Aluminijumska ruka sa čepom neosvetljena (bela ili siva elox.) do ukupne dužine 2,75 m (za rampu R-3) odnosno 4,75 m (za rampu R-4) sa reflektujućim nalepnicama.

Set za osvetljenje ruke/zapreke u LED žutoj/crvenoj ili plavoj boji.

Sastav seta:

vodootporne LED diode sa konektorima dužine 2 m
beli ili sivi profil-držač LED-a
transparentni zaštitni profil
potrebni završni čepovi sa inox šrafovima
aluminijumske nitne za učvršćenje držača mekog profila

Set zaštitne gume (bez senzora dužina) pruža zaštitu od mehaničkih oštećenja.

Sastav seta:

beli ili sivi držač mekog profila
meki zaštitni profil u oker žutoj, sivoj ili crnoj boji
potrebni završni čepovi sa inox šrafovima
aluminijumske nitne za učvršćenje držača mekog profila

Tripod

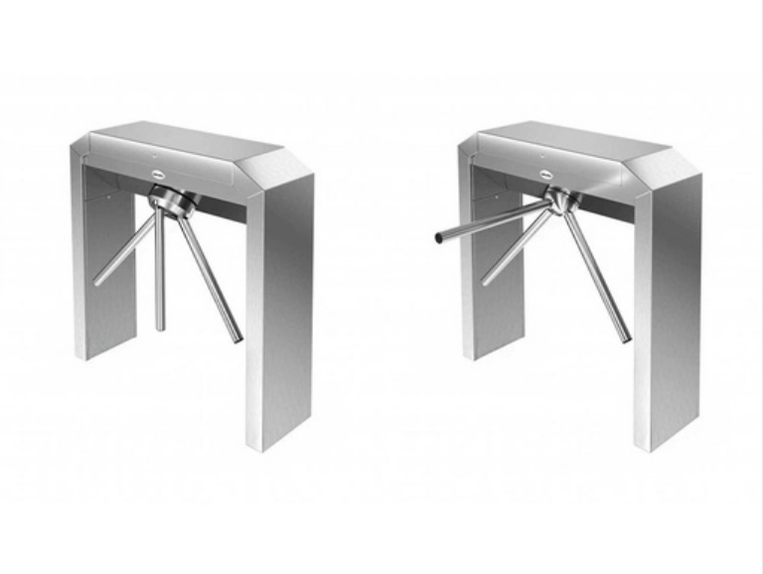

Tripod ili trokraka pešačka barijera se može koristiti u različitim okruženjima.

Predstavlja idealno rešenje za kontrolu pristupa i identifikaciju osoba.
Može se koristiti u unutrašnjem i spoljnom okruženju.

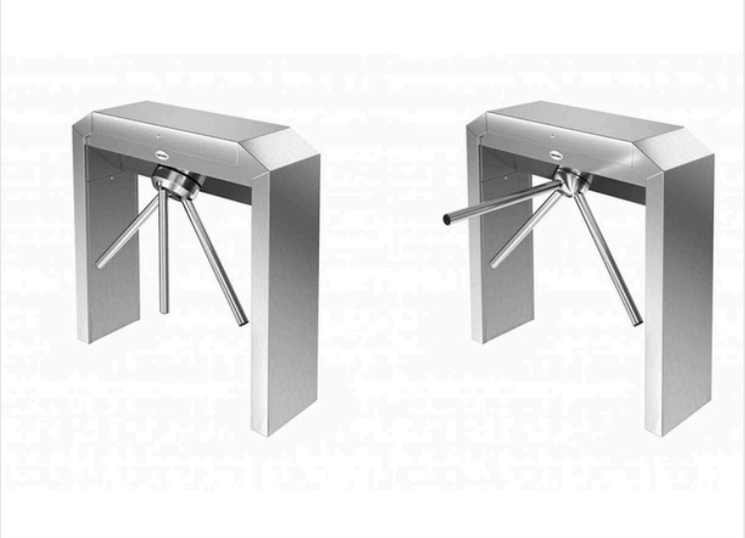

Elektronsko upravljanje barijerom dozvoljava jednostavno podešavanje sopstvenog režima rada barijere,
ali i komunikaciju sa različitim uređajima za identifikaciju i signalizaciju.
Kako bi pokrila što više sigurnosnih zahteva, barijera ima na raspolaganju dodatnu opremu kao što su
čitači ID kartica i medija, svetla za pristup, infracrvene senzore protiv penjanja, rezervno napajanje itd.

Dimensions (mm)

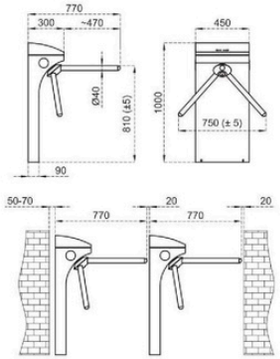

Technical Features

Place of Use	Indoors, outdoors.
Operating Temperature, Humidity	-20°C/+68°C (opt. -50°C with heater positive), RH 95% non-condensing.
Operating Intensity	100%, 7/24 use.
Body Features	**Material** : 304 grade (opt. 316 grade) stainless steel. **Finishing** : Orbital brushed matt (opt. electrostatic powder coating on stainless steel).
Arms	**Automatic Drop (Retractable) Arm** : Optional **Material** : Ø40x2 mm 304 grade (opt. 316 grade) stainless steel, one by one demountable. **Finishing** : Satine brushed (opt. orbital brushed matt, electrostatic powder coating on stainless steel).
Indicators	**Side Status / Direction Indicators** : LED, standard. **Top Passage Indicator** : LED, standard.
Power	**Operating Voltage** : 110/220V AC 50/60 Hz. (%±10), 24V DC. **Consumption** : ~3,4W at stand-by, during passage ~2,7W (varies according to the options and accessories used).
Operating Modes	System operates bi-directionally (entry-exit). Operation modes can be changed through dip switch, IOS and/or android app. Entry - exit controlled / Entry controlled, exit free / Entry free, exit controlled Single input both directions use / Entry - exit free
Operating System	Electromechanical manual operation (opt. electromechanical motorized operation).
Control System	All functions, parameters and operating modes can be changed through the control board (microprocessor controlled), IOS and/or android app. Firmware can be updated. All past function updates and changes are kept in the server and records can be traced. All inputs are opto-coupler protected. Controllable by dry contact (ground control). Compatible with all kinds of access control device. Optional RS232-RS485-TCP/IP module is available. GET IT ON Google Play Download on the App Store
Flow Rate	**Capacity of mechanism (manual)** : Max. 82 cycle/min. **Nominal :** ~30 pass/min. **Capacity of mechanism (motorized)** : Max. 75 cycle/min. **Nominal :** ~25 pass/min. (Passage rate can change depending on the access control system utilized)
Emergency Mode	System allows free passage (entry-exit) in both directions (fail safe). Works compatible with fire warning and similar systems. At the end of an emergency situation, system returns to its normal operating mode.
Power-off Situation	System allows free passage (entry-exit) in both directions (fail safe). Optionally, can be set (fail secure) as; entry-exit locked, entry free-exit locked, or entry locked-exit free. Free passage in chosen direction by manual override key in fail secure option is available.
Weight	~35 kg
Optional Features and Accessories	Automatic drop (retractable) arm, motor driven unit, wireless remote control (receiver-transmitter), manual control, manual override key (with fail secure option), coin slot and coin box, single/multiple intelligent coin/token slot and box, counter (with/without reset), card reader mounting bracket, photocell alarm sensor, passage completion sensor, contactless passage sensor (for motorized models), heater positive, top lid weight sensor, bottom plate, battery back-up, 316 grade stainless steel, RS232-RS485-TCP/IP modules, limiter, electrostatic powder coating on stainless steel.

602 D - Okretnica u visini struka

Dimensions (mm)

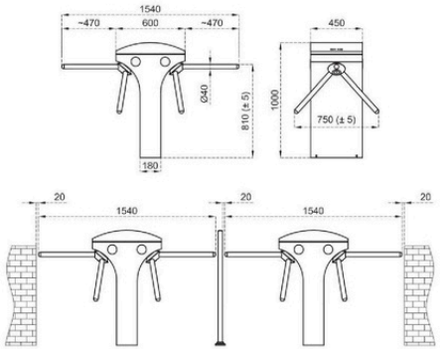

Technical Features

Place of Use	Indoors, outdoors.
Operating Temperature, Humidity	-20°C/+68°C (opt. -50°C with heater positive), RH 95% non-condensing.
Operating Intensity	100%, 7/24 use.
Body Features	**Material** : 304 grade (opt. 316 grade) stainless steel. **Finishing** : Orbital brushed matt (opt. electrostatic powder coating on stainless steel).
Arms	**Automatic Drop (Retractable) Arm** : Optional **Material** : Ø40x2 mm 304 grade (opt. 316 grade) stainless steel, one by one demountable. **Finishing** : Satine brushed (opt. orbital brushed matt, electrostatic powder coating on stainless steel).
Indicators	**Side Status / Direction Indicators** : LED, standard. **Top Passage Indicator** : LED, standard.
Power	**Operating Voltage** : 110/220V AC 50/60 Hz. (%±10), 24V DC. **Consumption** : ~6,8W at stand-by, during passage ~2,7+2,7W (varies according to the options and accessories used).
Operating Modes	System operates bi-directionally (entry-exit). Operation modes can be changed through dip switch, IOS and/or android app. Entry - exit controlled / Entry controlled, exit free / Entry free, exit controlled Single input both directions use / Entry - exit free
Operating System	Electromechanical manual operation (opt. electromechanical motorized operation).
Control System	All functions, parameters and operating modes can be changed through the control board (microprocessor controlled), IOS and/or android app. Firmware can be updated. All past function updates and changes are kept in the server and records can be traced. All inputs are opto-coupler protected. Controllable by dry contact (ground control). Compatible with all kinds of access control device. Optional RS232-RS485-TCP/IP module is available. GET IT ON Google Play Download on the App Store
Flow Rate	**Capacity of mechanism (manual)** : Max. 164 cycle/min. **Nominal :** ~60 pass/min. **Capacity of mechanism (motorized)** : Max. 150 cycle/min. **Nominal :** ~50pass/min. (Passage rate can change depending on the access control system utilized)
Emergency Mode	System allows free passage (entry-exit) in both directions (fail safe). Works compatible with fire warning and similar systems. At the end of an emergency situation, system returns to its normal operating mode.
Power-off Situation	System allows free passage (entry-exit) in both directions (fail safe). Optionally, can be set (fail secure) as; entry-exit locked, entry free-exit locked, or entry locked-exit free. Free passage in chosen direction by manual override key in fail secure option is available.
Weight	~55 kg
Optional Features and Accessories	Automatic drop (retractable) arm, motor driven unit, wireless remote control (receiver-transmitter), manual control, manual override key (with fail secure option), coin slot and coin box, single/multiple intelligent coin/token slot and box, counter (with/without reset), card reader mounting bracket, photocell alarm sensor, passage completion sensor, contactless passage sensor (for motorized models), heater positive, top lid weight sensor, bottom plate, battery back-up, 316 grade stainless steel, RS232-RS485-TCP/IP modules, limiter, electrostatic powder coating on stainless steel.

Dimensions (mm)

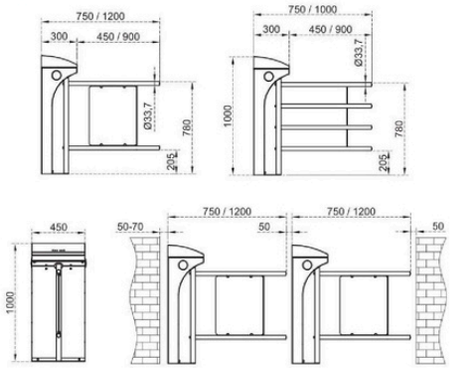

Technical Features

Place of Use	Indoors, outdoors (with wing adaptation)
Operating Temperature, Humidity	-20°C/+68°C (opt. -50°C with heater positive), RH 95% non-condensing.
Operating Intensity	100%, 7/24 use.
Body Features	**Material** : 304 grade (opt. 316 grade) stainless steel. **Finishing** : Orbital brushed matt (opt. electrostatic powder coating on stainless steel).
Wing	**Material** : Ø33,7x1,5 mm 304 grade stainless steel pipe with acrylic infill (for indoor use), Ø33,7x1,5 mm 304 grade stainless steel pipe (for outdoor use). **Finishing** : Satine brushed (opt. orbital brushed matt, electrostatic powder coating on stainless steel).
Indicators	**Side Status /Direction Indicators** : LED, standard. **Top Passage Indicator** : LED, standard.
Power	**Operating Voltage** : 110/220V AC 50/60 Hz. (±10%), 24V DC. **Consumption** : ~9W at stand-by, max ~44W (varies according to the options and accessories used).
Operating Modes	System operates bi-directionally (entry-exit). Operation modes can be changed through dip switch, IOS and/or android app. Entry - exit controlled Entry - exit free (with optional photocell) Entry controlled, exit free (with optional photocell) Exit controlled, entry free (with optional photocell) Electromechanical motorized operation.
Operating System	Electromechanical motorized operation.
Control System	All functions, parameters and operating modes can be changed through the control board (microprocessor controlled), IOS and/or android app. Firmware can be updated. All past function updates and changes are kept in the server and records can be traced. All inputs are opto-coupler protected. Controllable by dry contact (ground control). Compatible with all kinds of access control device. Optional RS232, RS485 or TCP/IP module is available. GET IT ON Google Play Download on the App Store
Flow Rate	Wing opening / closing time : ~1,5 sec.
Emergency Mode	System provides a free passageway (entry-exit) by opening the wing in preferred direction configured by dip switch (fail safe). Works compatible with fire warning and similar systems. At the end of an emergency situation, system returns to its normal operating mode.
Power-off Situation	System provides a free passageway (entry-exit) by manually pushing the wing towards entry or exit directions (fail safe). Optionally, can be set as entry-exit locked (fail secure). Free passageway can be granted by manual override key in fail secure option.
Weight	~37 kg
Optional Features and Accessories	Wireless remote control (receiver-transmitter), manual control, manual override key (with fail secure option), coin slot and coin box, single/multiple intelligent coin/token slot and box, counter (with/without reset), card reader mounting bracket, photocell alarm sensor, heater positive, top lid weight sensor, bottom plate, battery back-up, 316 grade stainless steel, RS232-RS485-TCP/IP modules, limiter, photocell for free mode, electrostatic powder coating on stainless steel.

Dimensions (mm)

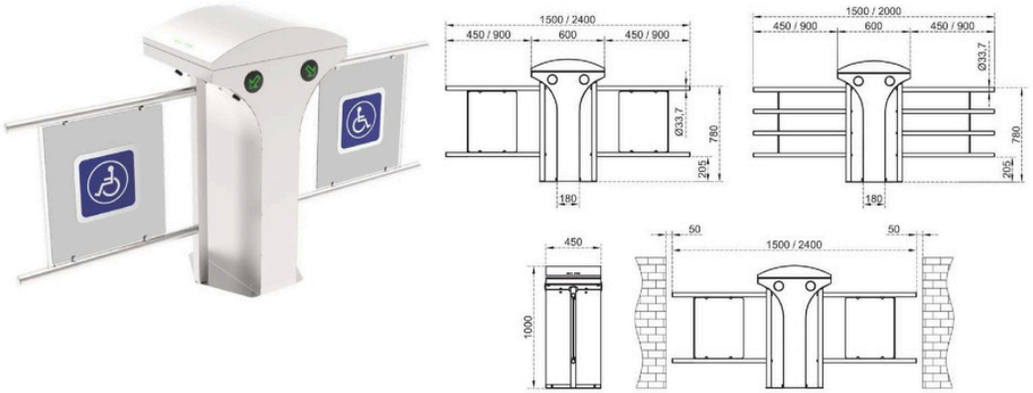

Technical Features

Place of Use	Indoors, outdoors (with wing adaptation)
Operating Temperature, Humidity	-20°C/+68°C (opt. -50°C with heater positive), RH 95% non-condensing.
Operating Intensity	100%, 7/24 use.
Body Features	**Material** : 304 grade (opt. 316 grade) stainless steel. **Finishing** : Orbital brushed matt (opt. electrostatic powder coating on stainless steel).
Wing	**Material** : Ø33,7x1,5 mm 304 grade stainless steel pipe with acrylic infill (for indoor use), Ø33,7x1,5 mm 304 grade stainless steel pipe (for outdoor use). **Finishing** : Satine brushed (opt. orbital brushed matt, electrostatic powder coating on stainless steel).
Indicators	**Side Status /Direction Indicators** : LED, standard. **Top Passage Indicator** : LED, standard.
Power	**Operating Voltage** : 110/220V AC 50/60 Hz. (±10%), 24V DC. **Consumption** : ~18W at stand-by, max ~44+44W (varies according to the options and accessories used).
Operating Modes	System operates bi-directionally (entry-exit). Operation modes can be changed through dip switch, IOS and/or android app. Entry - exit controlled Entry - exit free (with optional photocell) Entry controlled, exit free (with optional photocell) Exit controlled, entry free (with optional photocell)
Operating System	Electromechanical motorized operation.
Control System	All functions, parameters and operating modes can be changed through the control board (microprocessor controlled), IOS and/or android app. Firmware can be updated. All past function updates and changes are kept in the server and records can be traced. All inputs are opto-coupler protected. Controllable by dry contact (ground control). Compatible with all kinds of access control device. Optional RS232, RS485 or TCP/IP module is available. GET IT ON Google Play Download on the App Store
Flow Rate	Wing opening / closing time : ~1,5 sec.
Emergency Mode	System provides a free passageway (entry-exit) by opening the wing in preferred direction configured by dip switch (fail safe). Works compatible with fire warning and similar systems. At the end of an emergency situation, system returns to its normal operating mode.
Power-off Situation	System provides a free passageway (entry-exit) by manually pushing the wing towards entry or exit directions (fail safe). Optionally, can be set as entry-exit locked (fail secure). Free passageway can be granted by manual override key in fail secure option.
Weight	~59 kg
Optional Features and Accessories	Wireless remote control (receiver-transmitter), manual control, manual override key (with fail secure option), coin slot and coin box, single/multiple intelligent coin/token slot and box, counter (with/without reset), card reader mounting bracket, photocell alarm sensor, heater positive, top lid weight sensor, bottom plate, battery back-up, 316 grade stainless steel, RS232-RS485-TCP/IP modules, limiter, photocell for free mode, electrostatic powder coating on stainless steel.

Dimensions (mm)

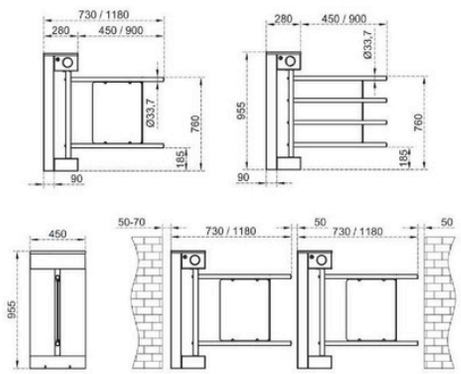

Technical Features

Place of Use	Indoors, outdoors (with wing adaptation)
Operating Temperature, Humidity	-20°C/+68°C (opt. -50°C with heater positive), RH 95% non-condensing.
Operating Intensity	100%, 7/24 use.
Body Features	**Material** : 304 grade (opt. 316 grade) stainless steel. **Finishing** : Orbital brushed matt (opt. electrostatic powder coating on stainless steel).
Wing	**Material** : Ø33,7x1,5 mm 304 grade stainless steel pipe with acrylic infill (for indoor use), Ø33,7x1,5 mm 304 grade stainless steel pipe (for outdoor use). **Finishing** : Satine brushed (opt. orbital brushed matt, electrostatic powder coating on stainless steel).
Indicators	**Side Status/Direction Indicators** : LED, standard.
Power	**Operating Voltage** : 110/220V AC 50/60 Hz. (±10%), 24V DC. **Consumption** : ~5W at stand-by, max ~40W (varies according to the options and accessories used).
Operating Modes	System operates bi-directionally (entry-exit). Operation modes can be changed through dip switch, IOS and/or android app. Entry - exit controlled Entry - exit free (with optional photocell) Entry controlled, exit free (with optional photocell) Exit controlled, entry free (with optional photocell)
Operating System	Electromechanical motorized operation.
Control System	All functions, parameters and operating modes can be changed through the control board (microprocessor controlled), IOS and/or android app. Firmware can be updated. All past function updates and changes are kept in the server and records can be traced. All inputs are opto-coupler protected. Controllable by dry contact (ground control). Compatible with all kinds of access control device. Optional RS232, RS485 or TCP/IP module is available. GET IT ON Google Play Download on the App Store
Flow Rate	Wing opening / closing time : ~1,5 sec.
Emergency Mode	System provides a free passageway (entry-exit) by opening the wing in preferred direction configured by dip switch (fail safe). Works compatible with fire warning and similar systems. At the end of an emergency situation, system returns to its normal operating mode.
Power-off Situation	System provides a free passageway (entry-exit) by manually pushing the wing towards entry or exit directions (fail safe). Optionally, can be set as entry-exit locked (fail secure). Free passageway can be granted by manual override key in fail secure option.
Weight	~33 kg
Optional Features and Accessories	Wireless remote control (receiver-transmitter), manual control, manual override key (with fail secure option), coin slot and coin box, single/multiple intelligent coin/token slot and box, counter (with/without reset), card reader mounting bracket, photocell alarm sensor, heater positive, top lid weight sensor, bottom plate, battery back-up, 316 grade stainless steel, RS232-RS485-TCP/IP modules, limiter, photocell for free mode, top passage indicator, electrostatic powder coating on stainless steel.

705 E N 1 D - Turniketi za osobe sa posebnim potrebama

Dimensions (mm)

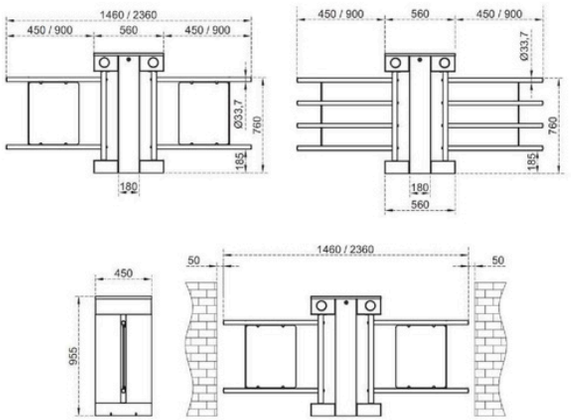

Technical Features

Place of Use	Indoors, outdoors (with wing adaptation)
Operating Temperature, Humidity	-20°C/+68°C (opt. -50°C with heater positive), RH 95% non-condensing.
Operating Intensity	100%, 7/24 use.
Body Features	**Material** : 304 grade (opt. 316 grade) stainless steel. **Finishing** : Orbital brushed matt (opt. electrostatic powder coating on stainless steel).
Wing	**Material** : Ø33,7x1,5 mm 304 grade stainless steel pipe with acrylic infill (for indoor use), Ø33,7x1,5 mm 304 grade stainless steel pipe (for outdoor use). **Finishing** : Satine brushed (opt. orbital brushed matt, electrostatic powder coating on stainless steel).
Indicators	**Side Status/Direction Indicators** : LED, standard.
Power	**Operating Voltage** : 110/220V AC 50/60 Hz. (±10%), 24V DC. **Consumption** : ~10W at stand-by, max ~40+40W (varies according to the options and accessories used).
Operating Modes	System operates bi-directionally (entry-exit). Operation modes can be changed through dip switch, IOS and/or android app. Entry - exit controlled Entry - exit free (with optional photocell) Entry controlled, exit free (with optional photocell) Exit controlled, entry free (with optional photocell)
Operating System	Electromechanical motorized operation.
Control System	All functions, parameters and operating modes can be changed through the control board (microprocessor controlled), IOS and/or android app. Firmware can be updated. All past function updates and changes are kept in the server and records can be traced. All inputs are opto-coupler protected. Controllable by dry contact (ground control). Compatible with all kinds of access control device. Optional RS232, RS485 or TCP/IP module is available. GET IT ON Google Play Download on the App Store
Flow Rate	Wing opening / closing time : ~1,5 sec.
Emergency Mode	System provides a free passageway (entry-exit) by opening the wing in preferred direction configured by dip switch (fail safe). Works compatible with fire warning and similar systems. At the end of an emergency situation, system returns to its normal operating mode.
Power-off Situation	System provides a free passageway (entry-exit) by manually pushing the wing towards entry or exit directions (fail safe). Optionally, can be set as entry-exit locked (fail secure). Free passageway can be granted by manual override key in fail secure option.
Weight	~53 kg
Optional Features and Accessories	Wireless remote control (receiver-transmitter), manual control, manual override key (with fail secure option), coin slot and coin box, single/multiple intelligent coin/token slot and box, counter (with/without reset), card reader mounting bracket, photocell alarm sensor, heater positive, top lid weight sensor, bottom plate, battery back-up, 316 grade stainless steel, RS232-RS485-TCP/IP modules, limiter, photocell for free mode, top passage indicator, electrostatic powder coating on stainless steel.

Dimensions (mm)

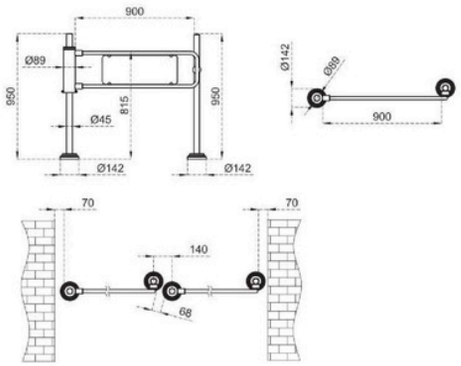

Technical Features

Place of Use	Indoors, outdoors (with wing adaptation)
Operating Intensity	100%, 7/24 use.
Body Features	**Material** : Ø89x3 mm 304 grade stainless steel. **Finishing** : Satine brushed (opt. orbital brushed matt, electrostatic powder coating on stainless steel).
Wing	**Material** : Ø27x2 mm 304 grade stainless steel pipe with acrylic infill. **Finishing** : Satine brushed (opt. orbital brushed matt, electrostatic powder coating on stainless steel).
Power	**Operating Voltage** : No power for standard model (opt. 24V DC (250mA) for 35 kg elecromagnetic lock).
Operating Mode	System operates uni-directionally (clockwise or counter clockwise). Wing,opening 90° by pushing comes back to its original position thanks to the spring system ensuring the closing of the wing.
Operating System	Mechanical manual operation.
Emergency Mode	Electromagnetic lock (if any) is deactivated during the emergency contact, and the wing is pushed manually to create a free passageway.
Power-off Situation	Electromagnetic lock (if any) becomes disabled, and the wing is pushed manually to create a free passageway.
Weight	~15 kg
Optional Features and Accessories	Electromagnetic lock, wireless remote control (receiver-transmitter, with electromagnetic lock option), manual control (with electromagnatic lock option), key lock pole, bottom plate, electrostatic powder coating on stainless steel.

GİRİŞ
GİRİŞ

Dimensions (mm)

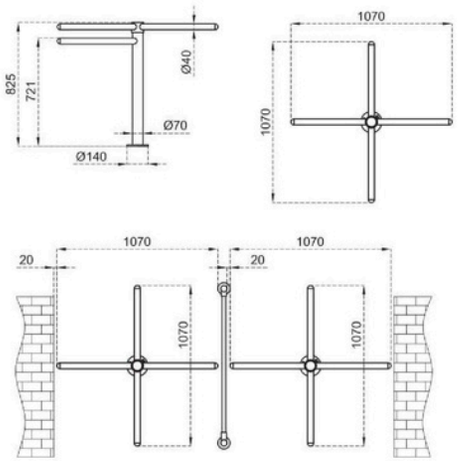

Technical Features

Place of Use	Indoors, outdoors (with wing adaptation)
Operating Intensity	100%, 7/24 use.
Body Features	**Material** : Ø70x2 mm 304 grade stainless steel. **Finishing** : Satine brushed (opt. orbital brushed matt, electrostatic powder coating on stainless steel).
Arms	**Material** : Ø40x2 mm 304 grade stainless steel pipe, Ø42x2,5 mm red painted steel anti-return arm **Finishing** : Satine brushed (opt. orbital brushed matt, electrostatic powder coating on stainless steel).
Operating Mode	System operates uni-directionally (clockwise or counter clockwise).
Operating System	Manual operation turning by pushing.
Weight	~15 kg
Optional Features and Accessories	Bottom plate

Dimensions (mm)

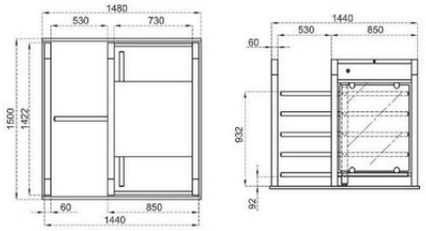

Technical Features

Place of Use	Indoors, outdoors
Operating Temperature, Humidity	-20°C/+68°C (opt. -50°C with heater positive), RH 95% non-condensing.
Operating Intensity	100%, 7/24 use.
Body / Arm Features	Built on box beam main carriers and contains waterproof protecting top lid. Four-section rotor (90°), each having 5 one by one demountable arms. Combination options with different material choices:

	HT 400	HT 400-25	HT 400-100
Body	Electrostatic powder coating on hot-dip galvanized steel	Electrostatic powder coating on hot-dip galvanized steel	304 grade (opt. 316 grade)* stainless steel
Arms	Electrostatic powder coating on hot-dip galvanized steel, Ø42x2,5 mm.	304 grade (opt. 316 grade)* stainless steel, Ø40x2,0 mm.	304 grade (opt. 316 grade)* stainless steel, Ø40x2,0 mm.

(*) Finishing : Satine brushed (opt. electrostatic powder coating on stainless steel).

Indicators	**Status - Direction Indicators :** DOT MATRIX LED, standard. **Passage Indicators :** LED standard.
Power	**Operating Voltage :** 110/220V AC 50/60 Hz. (±10%), 24V DC. **Consumption :** ~14W at stand-by, max ~50W (varies according to the options and accessories used).
Operating Modes	System operates bi-directionally (entry-exit). Operation modes can be changed through dip switch, IOS and/or android app. Entry - exit controlled / Entry controlled, exit free / Entry free, exit controlled Single input both directions use / Entry - exit free
Operating System	Electromechanical manual operation (opt. electromechanical motorized operation).
Control System	All functions, parameters and operating modes can be changed through the control board (microprocessor controlled), IOS and/or android app. Firmware can be updated. All past function updates and changes are kept in the server and records can be traced. All inputs are opto-coupler protected. Controllable by dry contact (ground control). Compatible with all kinds of access control device. Optional RS232, RS485 or TCP/IP module is available. GET IT ON Google Play Download on the App Store
Flow Rate	**Passage capacity (manual) :** max. 50 cycle/min. **Nominal :** ~25 pass/min. **Passage capacity (motorized) :** max. 34 cycle/min. **Nominal :** ~18 pass/min. (nominal passage rate can change depending on the access control system utilized)
Emergency Mode	System allows free passage (entry-exit) in both directions (fail safe). Works compatible with fire warning and similar systems. At the end of an emergency situation, system returns to its normal operating mode.
Power-off Situation	System allows free passage (entry-exit) in both directions (fail safe). Optionally, can be set (fail secure) as; entry-exit locked, entry free-exit locked, or entry locked-exit free. Free passage in chosen direction by manual override key in fail secure option is available.
Weight	~150 kg
Optional Features and Accessories	Motor driven unit, wireless remote control (receiver-transmitter), manual control, manual override key (with fail secure option), counter (with/without reset), card reader mounting bracket, passage completion sensor, contactless passage sensor (for motorized models), heater positive, bottom plate (standard or for forklift handling), battery back-up, 316 grade stainless steel, RS232-RS485-TCP/IP modules, limiter, different color choices.

Dimensions (mm)

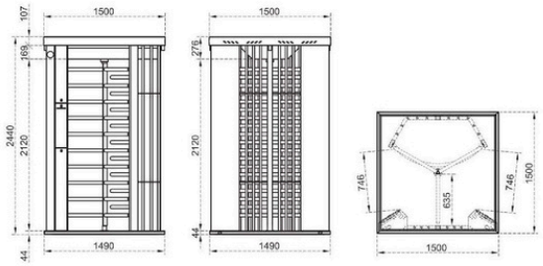

Technical Features

Place of Use	Indoors, outdoors
Operating Temperature, Humidity	-20°C/+68°C (opt. -50°C with heater positive), RH 95% non-condensing.
Operating Intensity	100%, 7/24 use.
Body / Arm Features	Consisting of floor with anti-slip aluminium coated stainless steel sub-chasis, body built on main carriers and supported with pipes and box type beams on sides, stainless steel waterproof roof covered with corrugated steel, with rain gutters and completely closed ceiling. There are columns with 3 sections designed for installation of electronic system, card reader and access control systems in both entry and exit directions. The mechanics compartment is accessible from the ceiling. Three-section rotor (120°), each having 10 one by one demountable arms. Complies with UK H&S regulation of ≤98 mm gap between upright profiles. **Body**: 304 grade (opt. 316 grade) stainless steel. **Arms**: 304 grade (opt. 316 grade)* stainless steel, Ø40x2,0 mm. (*) Finishing : Satine brushed (opt. electrostatic powder coating on stainless steel).
Indicators / Illumination	**Status - Direction Indicators** : LED, standard/LED passageway illumination standard. **Passage Indicator** : RGB LED standard.
Power	**Operating Voltage** : 110/220V AC 50/60 Hz. (%±10), 24V DC. **Consumption** : ~8,1W at stand-by, during passage ~7,6W (varies according to the options and accessories used).
Operating Modes	System operates bi-directionally (entry-exit). Operation modes can be changed through dip switch, IOS and/or android app. Entry - exit controlled; Entry controlled, exit free; Entry free, exit controlled Single input both directions use; Entry - exit free
Operating System	Electromechanical manual operation (opt. electromechanical motorized operation).
Control System	All functions, parameters and operating modes can be changed through the control board (microprocessor controlled), IOS and/or android app. Firmware can be updated. All past function updates and changes are kept in the server and records can be traced. All inputs are opto-coupler protected. Controllable by dry contact (ground control). Compatible with all kinds of access control device. Optional RS232, RS485 or TCP/IP module is available. GET IT ON Google Play Download on the App Store
Flow Rate	**Passage capacity (manual)** : max. 48 cycle/min. **Nominal** : ~25 pass/min. **Passage capacity (motorized)** : max. 40 cycle/min. **Nominal** : ~20 pass/min. (nominal passage rate can change depending on the access control system utilized)
Emergency Mode	System allows free passage (entry-exit) in both directions (fail safe). Works compatible with fire warning and similar systems. At the end of an emergency situation, system returns to its normal operating mode.
Power-off Situation	System allows free passage (entry-exit) in both directions (fail safe). Optionally, can be set (fail secure) as; entry-exit locked, entry free-exit locked, or entry locked-exit free. Free passage in chosen direction by manual override key in fail secure option is available.
Weight	~475 kg
Optional Features and Accessories	Motor driven unit, wireless remote control (receiver-transmitter), manual control, manual override key (with fail secure option), counter (with/without reset), card reader mounting bracket, passage completion sensor, contactless passage sensor (for motorized models), heater positive, canopy, battery back-up, 316 grade stainless steel, RS232-RS485-TCP/IP modules, limiter, trombone arms, different color choices, motorized card collector unit and card collection box.

B2
B2
403 404

Dimensions (mm)

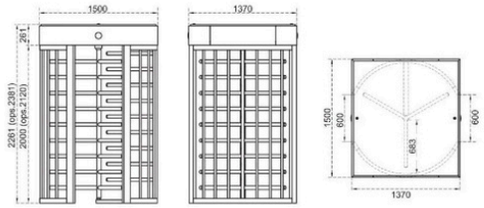

Technical Features

Place of Use	Indoors, outdoors
Operating Temperature, Humidity	-20°C/+68°C (opt. -50°C with heater positive), RH 95% non-condensing.
Operating Intensity	100%, 7/24 use.
Body / Arm Features	Built on main carriers and supported with pipe beams on sides, consisting of waterproof and protecting top lid, mechanical compartment side panels and completely closed ceiling. Can be completely disassembled. Three-section rotor (120°), each having 9 (10 in optional 2120 mm clear passage height) one by one demountable arms. Optionally complies with UK H&S regulation of ≤98 mm gap between upright profiles. Combination options with different material choices:

	BT 312	BT 312-25	BT 312-100
Body	Electrostatic powder coating on hot-dip galvanized steel	Electrostatic powder coating on hot-dip galvanized steel	304 grade (opt. 316 grade) stainless steel
Arms	Electrostatic powder coating on hot-dip galvanized steel, Ø42x2,5 mm.	304 grade (opt. 316 grade)* stainless steel, Ø40x2,0 mm.	304 grade (opt. 316 grade)* stainless steel, Ø40x2,0 mm.

(*) Finishing : Satine brushed (opt. electrostatic powder coating on stainless steel).

Indicators / Illumination	**Status - Direction Indicators :** LED, standard/LED passageway illumination standard.
Power	**Operating Voltage** : 110/220V AC 50/60 Hz. (±10%), 24V DC. **Consumption** : ~8,1W at stand-by, during passage ~7,6W (varies according to the options and accessories used).
Operating Modes	System operates bi-directionally (entry-exit). Operation modes can be changed through dip switch, IOS and/or android app. Entry - exit controlled / Entry controlled, exit free / Entry free, exit controlled Single input both directions use / Entry - exit free
Operating System	Electromechanical manual operation (opt. electromechanical motorized operation).
Control System	All functions, parameters and operating modes can be changed through the control board (microprocessor controlled), IOS and/or android app. Firmware can be updated. All past function updates and changes are kept in the server and records can be traced. All inputs are opto-coupler protected. Controllable by dry contact (ground control). Compatible with all kinds of access control device. Optional RS232, RS485 or TCP/IP module is available GET IT ON Google Play Download on the App Store
Flow Rate	**Passage capacity (manual)** : max. 48 cycle/min. **Nominal :** ~25 pass/min. **Passage capacity (motorized)** : max. 40 cycle/min. **Nominal :** ~20 pass/min. (nominal passage rate can change depending on the access control system utilized)
Emergency Mode	System allows free passage (entry-exit) in both directions (fail safe). Works compatible with fire warning and similar systems. At the end of an emergency situation, system returns to its normal operating mode.
Power-off Situation	System allows free passage (entry-exit) in both directions (fail safe). Optionally, can be set (fail secure) as; entry-exit locked, entry free-exit locked, or entry locked-exit free. Free passage in chosen direction by manual override key in fail secure option is available.
Weight	~275 kg
Optional Features and Accessories	Motor driven unit, wireless remote control (receiver-transmitter), manual control, manual override key (with fail secure option), counter (with/without reset), card reader mounting bracket, passage completion sensor, contactless passage sensor (for motorized models), heater positive, canopy, bottom plate (standard or for forklift handling), battery back-up, 316 grade stainless steel, RS232-RS485-TCP/IP modules, limiter, 2120 mm clear passage height, mechanics compartment accessibility from the ceiling, trombone arms, different color choices, compliance with UK H&S regulation of ≤98 mm gap between upright profiles.

Dimensions (mm)

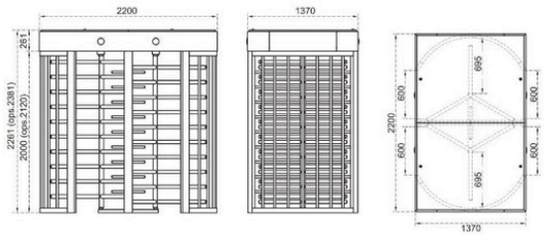

Technical Features

Place of Use	Indoors, outdoors
Operating Temperature, Humidity	-20°C/+68°C (opt. -50°C with heater positive), RH 95% non-condensing.
Operating Intensity	100%, 7/24 use.
Body / Arm Features	Built on main carriers and supported with pipe beams on sides, consisting of waterproof and protecting top lid, mechanical compartment side panels and completely closed ceiling. Can be completely disassembled. A pair of three-section rotors (120°), each having 10+10 (11+11 in optional 2120 mm clear passage height) one by one demountable arms. Optionally complies with UK H&S regulation of ≤98 mm gap between upright profiles. Combination options with different material choices:

	BT 312 D	BT 312 D-25	BT 312 D-100
Body	Electrostatic powder coating on hot-dip galvanized steel	Electrostatic powder coating on hot-dip galvanized steel	304 grade (opt. 316 grade) stainless steel
Arms	Electrostatic powder coating on hot-dip galvanized steel, Ø42x2,5 mm.	304 grade (opt. 316 grade)* stainless steel, Ø40x2,0 mm.	304 grade (opt. 316 grade)* stainless steel, Ø40x2,0 mm.

(*) Finishing : Satine brushed (opt. electrostatic powder coating on stainless steel).

Indicators / Illumination	**Status - Direction Indicators :** LED, standard/LED passageway illumination standard.
Power	**Operating Voltage** : 110/220V AC 50/60 Hz. (±10%), 24V DC. **Consumption** : ~16,2W at stand-by, during passage ~7,6+7,6W (varies according to the options and accessories used).
Operating Modes	System operates bi-directionally (entry-exit). Operation modes can be changed through dip switch, IOS and/or android app. Entry - exit controlled / Entry controlled, exit free / Entry free, exit controlled Single input both directions use / Entry - exit free
Operating System	Electromechanical manual operation (opt. electromechanical motorized operation).
Control System	All functions, parameters and operating modes can be changed through the control board (microprocessor controlled), IOS and/or android app. Firmware can be updated. All past function updates and changes are kept in the server and records can be traced. All inputs are opto-coupler protected. Controllable by dry contact (ground control). Compatible with all kinds of access control device. Optional RS232, RS485 or TCP/IP module is available. GET IT ON Google Play Download on the App Store
Flow Rate	**Passage capacity (manual)** : max. 96 cycle/min. **Nominal** : ~50 pass/min. **Passage capacity (motorized)** : max. 80 cycle/min. **Nominal** : ~40 pass/min. (nominal passage rate can change depending on the access control system utilized)
Emergency Mode	System allows free passage (entry-exit) in both directions (fail safe). Works compatible with fire warning and similar systems. At the end of an emergency situation, system returns to its normal operating mode.
Power-off Situation	System allows free passage (entry-exit) in both directions (fail safe). Optionally, can be set (fail secure) as; entry-exit locked, entry free-exit locked, or entry locked-exit free. Free passage in chosen direction by manual override key in fail secure option is available.
Weight	~530 kg
Optional Features and Accessories	Motor driven unit, wireless remote control (receiver-transmitter), manual control, manual override key (with fail secure option), counter (with/without reset), card reader mounting bracket, passage completion sensor, contactless passage sensor (for motorized models), heater positive, canopy, bottom plate (standard or for forklift handling), battery back-up, 316 grade stainless steel, RS232-RS485-TCP/IP modules, limiter, 2120 mm clear passage height, mechanics compartment accessibility from the ceiling, different color choices, compliance with UK H&S regulation of ≤98 mm gap between upright profiles.

Dimensions (mm)

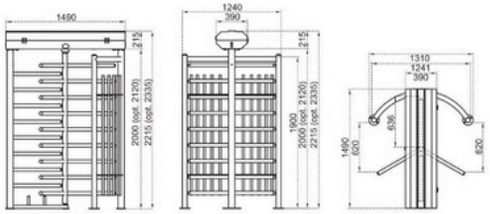

Technical Features

Place of Use	Indoors, outdoors
Operating Temperature, Humidity	-20°C/+68°C (opt. -50°C with heater positive), RH 95% non-condensing.
Operating Intensity	100%, 7/24 use.
Body / Arm Features	Built on main carriers and supported with pipe beams on sides, consisting of waterproof and protected top lid with damper for safety. Can be completely disassembled. Three-section rotor (120°), each having 9 (10 in optional 2120 mm clear passage height) one by one demountable arms. Complies with UK H&S regulation of ≤98 mm gap between upright profiles. Combination options with different material choices:

	BTX 300 N1	BTX 300 N1-25	BTX 300 N1-100
Body	Electrostatic powder coating on hot-dip galvanized steel	Electrostatic powder coating on hot-dip galvanized steel	304 grade (opt. 316 grade) stainless steel
Arms	Electrostatic powder coating on hot-dip galvanized steel, Ø42x2,5 mm.	304 grade (opt. 316 grade)* stainless steel, Ø40x2,0 mm.	304 grade (opt. 316 grade)* stainless steel, Ø40x2,0 mm.

(*) Finishing : Satine brushed (opt. electrostatic powder coating on stainless steel).

Indicators / Illumination	**Status - Direction Indicators :** LED, standard/LED passageway illumination standard.
Power	**Operating Voltage** : 110/220V AC 50/60 Hz. (±10%), 24V DC. **Consumption** : ~8,1W at stand-by, during passage ~7,6W (varies according to the options and accessories used).
Operating Modes	System operates bi-directionally (entry-exit). Operation modes can be changed through dip switch, IOS and/or android app. Entry - exit controlled / Entry controlled, exit free / Entry free, exit controlled Single input both directions use / Entry - exit free
Operating System	Electromechanical manual operation (opt. electromechanical motorized operation).
Control System	All functions, parameters and operating modes can be changed through the control board (microprocessor controlled), IOS and/or android app. Firmware can be updated. All past function updates and changes are kept in the server and records can be traced. All inputs are opto-coupler protected. Controllable by dry contact (ground control). Compatible with all kinds of access control device. Optional RS232, RS485 or TCP/IP module is available. GET IT ON Google Play Download on the App Store
Flow Rate	**Passage capacity (manual)** : max. 48 cycle/min. **Nominal :** ~25 pass/min. **Passage capacity (motorized)** : max. 40 cycle/min. **Nominal :** ~20 pass/min. (nominal passage rate can change depending on the access control system utilized)
Emergency Mode	System allows free passage (entry-exit) in both directions (fail safe). Works compatible with fire warning and similar systems. At the end of an emergency situation, system returns to its normal operating mode.
Power-off Situation	System allows free passage (entry-exit) in both directions (fail safe). Optionally, can be set (fail secure) as; entry-exit locked, entry free-exit locked, or entry locked-exit free. Free passage in chosen direction by manual override key in fail secure option is available.
Weight	~190 kg
Optional Features and Accessories	Motor driven unit, wireless remote control (receiver-transmitter), manual control, manual override key (with fail secure option), counter (with/without reset), card reader mounting bracket, passage completion sensor, contactless passage sensor (for motorized models), heater positive, canopy, bottom plate (standard or for forklift handling), battery back-up, 316 grade stainless steel, RS232-RS485-TCP/IP modules, limiter, 2120 mm clear passage height, mechanics compartment accessibility from the ceiling, trombone arms, different color choices.

Dimensions (mm)

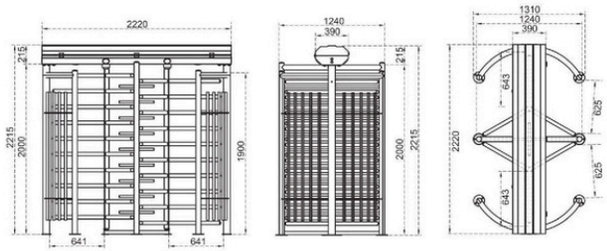

Technical Features

Place of Use	Indoors, outdoors
Operating Temperature, Humidity	-20°C/+68°C (opt. -50°C with heater positive), RH 95% non-condensing.
Operating Intensity	100%, 7/24 use.
Body / Arm Features	Built on main carriers and supported with pipe beams on sides, consisting of waterproof and protected top lid with damper for safety. Can be completely disassembled. A pair of three-section rotors (120°), each having 10+10 (11+11 in optional 2120 mm clear passage height) one by one demountable arms. Complies with UK H&S regulation of ≤98 mm gap between upright profiles. Combination options with different material choices:

	BTX 300 N1 D	BTX 300 N1 D-25	BTX 300 N1 D-100
Body	Electrostatic powder coating on hot-dip galvanized steel	Electrostatic powder coating on hot-dip galvanized steel	304 grade (opt. 316 grade) stainless steel
Arms	Electrostatic powder coating on hot-dip galvanized steel, Ø42x2,5 mm.	304 grade (opt. 316 grade)* stainless steel, Ø40x2,0 mm.	304 grade (opt. 316 grade)* stainless steel, Ø40x2,0 mm.

(*) Finishing : Satine brushed (opt. electrostatic powder coating on stainless steel).

Indicators / Illumination	**Status - Direction Indicators :** LED, standard/LED passageway illumination standard.
Power	**Operating Voltage** : 110/220V AC 50/60 Hz. (±10%), 24V DC. **Consumption** : ~16,2W at stand-by, during passage ~7,6+7,6W (varies according to the options and accessories used).
Operating Modes	System operates bi-directionally (entry-exit). Operation modes can be changed through dip switch, IOS and/or android app. Entry - exit controlled / Entry controlled, exit free / Entry free, exit controlled Single input both directions use / Entry - exit free
Operating System	Electromechanical manual operation (opt. electromechanical motorized operation).
Control System	All functions, parameters and operating modes can be changed through the control board (microprocessor controlled), IOS and/or android app. Firmware can be updated. All past function updates and changes are kept in the server and records can be traced. All inputs are opto-coupler protected. Controllable by dry contact (ground control). Compatible with all kinds of access control device. Optional RS232, RS485 or TCP/IP module is available. GET IT ON Google Play Download on the App Store
Flow Rate	**Passage capacity (manual)** : max. 96 cycle/min. **Nominal :** ~50 pass/min. **Passage capacity (motorized)** : max. 80 cycle/min. **Nominal :** ~40 pass/min. (nominal passage rate can change depending on the access control system utilized)
Emergency Mode	System allows free passage (entry-exit) in both directions (fail safe). Works compatible with fire warning and similar systems. At the end of an emergency situation, system returns to its normal operating mode.
Power-off Situation	System allows free passage (entry-exit) in both directions (fail safe). Optionally, can be set (fail secure) as; entry-exit locked, entry free-exit locked, or entry locked-exit free. Free passage in chosen direction by manual override key in fail secure option is available.
Weight	~365 kg
Optional Features and Accessories	Motor driven unit, wireless remote control (receiver-transmitter), manual control, manual override key (with fail secure option), counter (with/without reset), card reader mounting bracket, passage completion sensor, contactless passage sensor (for motorized models), heater positive, canopy, bottom plate (standard or for forklift handling), battery back-up, 316 grade stainless steel, RS232-RS485-TCP/IP modules, limiter, 2120 mm clear passage height, mechanics compartment accessibility from the ceiling, different color choices.

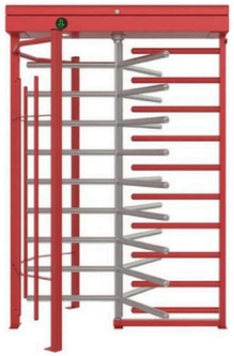

Dimensions (mm)

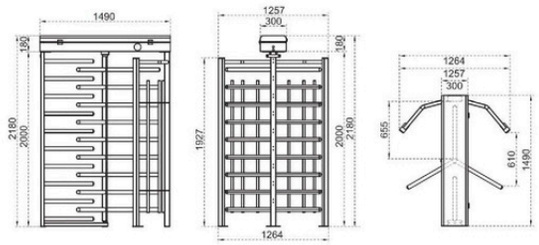

Technical Features

Place of Use	Indoors, outdoors
Operating Temperature, Humidity	-20°C/+68°C (opt. -50°C with heater positive), RH 95% non-condensing.
Operating Intensity	100%, 7/24 use.
Body / Arm Features	Built on main carriers and supported with pipe beams on sides, consisting of waterproof and protected top lid with damper for safety. Can be completely disassembled. Three-section rotor (120°), each having 9 (10 in optional 2120 mm clear passage height) one by one demountable arms. Optionally complies with UK H&S regulation of ≤98 mm gap between upright profiles. Combination options with different material choices:

	BTC 300	BTC 300-25	BTC 300-100
Body	Electrostatic powder coating on hot-dip galvanized steel	Electrostatic powder coating on hot-dip galvanized steel	304 grade (opt. 316 grade) stainless steel
Arms	Electrostatic powder coating on hot-dip galvanized steel, Ø42x2,5 mm.	304 grade (opt. 316 grade)* stainless steel, Ø40x2,0 mm.	304 grade (opt. 316 grade)* stainless steel, Ø40x2,0 mm.

(*) Finishing : Satine brushed (opt. electrostatic powder coating on stainless steel).

Indicators / Illumination	**Status - Direction Indicators :** LED, standard/LED passageway illumination standard.
Power	**Operating Voltage** : 110/220V AC 50/60 Hz. (%±10), 24V DC. **Consumption** : ~8,1W at stand-by, during passage ~7,6W (varies according to the options and accessories used).
Operating Modes	System operates bi-directionally (entry-exit). Operation modes can be changed through dip switch, IOS and/or android app. Entry - exit controlled / Entry controlled, exit free / Entry free, exit controlled Single input both directions use / Entry - exit free
Operating System	Electromechanical manual operation (opt. electromechanical motorized operation).
Control System	All functions, parameters and operating modes can be changed through the control board (microprocessor controlled), IOS and/or android app. Firmware can be updated. All past function updates and changes are kept in the server and records can be traced. All inputs are opto-coupler protected. Controllable by dry contact (ground control). Compatible with all kinds of access control device. Optional RS232, RS485 or TCP/IP module is available.
Flow Rate	**Passage capacity (manual)** : max. 48 cycle/min. **Nominal :** ~25 pass/min. **Passage capacity (motorized) :** max. 40 cycle/min. **Nominal :** ~20 pass/min. (nominal passage rate can change depending on the access control system utilized)
Emergency Mode	System allows free passage (entry-exit) in both directions (fail safe). Works compatible with fire warning and similar systems. At the end of an emergency situation, system returns to its normal operating mode.
Power-off Situation	System allows free passage (entry-exit) in both directions (fail safe). Optionally, can be set (fail secure) as; entry-exit locked, entry free-exit locked, or entry locked-exit free. Free passage in chosen direction by manual override key in fail secure option is available.
Weight	~175 kg
Optional Features and Accessories	Motor driven unit, wireless remote control (receiver-transmitter), manual control, manual override key (with fail secure option), counter (with/without reset), card reader mounting bracket, passage completion sensor, contactless passage sensor (for motorized models), heater positive, canopy, bottom plate (standard or for forklift handling), battery back-up, 316 grade stainless steel, RS232-RS485-TCP/IP modules, limiter, 2120 mm clear passage height, trombone arms, different color choices, compliance with UK H&S regulation of ≤98 mm gap between upright profiles.

Dimensions (mm)

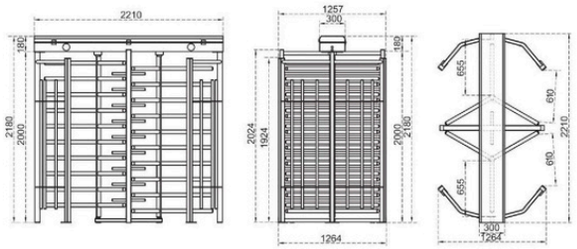

Technical Features

Place of Use	Indoors, outdoors
Operating Temperature, Humidity	-20°C/+68°C (opt. -50°C with heater positive), RH 95% non-condensing.
Operating Intensity	100%, 7/24 use.
Body / Arm Features	Built on main carriers and supported with pipe beams on sides, consisting of waterproof and protected top lid with damper for safety. Can be completely disassembled. A pair of three-section rotors (120°), each having 10+10 (11+11 in optional 2120 mm clear passage height) one by one demountable arms. Optionally complies with UK H&S regulation of ≤98 mm gap between upright profiles. Combination options with different material choices:

	BTC 300 D	BTC 300 D-25	BTC 300 D-100
Body	Electrostatic powder coating on hot-dip galvanized steel	Electrostatic powder coating on hot-dip galvanized steel	304 grade (opt. 316 grade) stainless steel
Arms	Electrostatic powder coating on hot-dip galvanized steel, Ø42x2,5 mm.	304 grade (opt. 316 grade)* stainless steel, Ø40x2,0 mm.	304 grade (opt. 316 grade)* stainless steel, Ø40x2,0 mm.

(*) Finishing : Satine brushed (opt. electrostatic powder coating on stainless steel).

Indicators / Illumination	**Status - Direction Indicators :** LED, standard/LED passageway illumination standard.
Power	**Operating Voltage** : 110/220V AC 50/60 Hz. (%±10), 24V DC. **Consumption** : ~16,2W at stand-by, during passage ~7,6+7,6W (varies according to the options and accessories used).
Operating Modes	System operates bi-directionally (entry-exit). Operation modes can be changed through dip switch, IOS and/or android app. Entry - exit controlled / Entry controlled, exit free / Entry free, exit controlled Single input both directions use / Entry - exit free
Operating System	Electromechanical manual operation (opt. electromechanical motorized operation).
Control System	All functions, parameters and operating modes can be changed through the control board (microprocessor controlled), IOS and/or android app. Firmware can be updated. All past function updates and changes are kept in the server and records can be traced. All inputs are opto-coupler protected. Controllable by dry contact (ground control). Compatible with all kinds of access control device. Optional RS232, RS485 or TCP/IP module is available. GET IT ON Google Play Download on the App Store
Flow Rate	**Passage capacity (manual)** : max. 96 cycle/min. **Nominal :** ~50 pass/min. **Passage capacity (motorized)** : max. 80 cycle/min. **Nominal :** ~40 pass/min. (nominal passage rate can change depending on the access control system utilized)
Emergency Mode	System allows free passage (entry-exit) in both directions (fail safe). Works compatible with fire warning and similar systems. At the end of an emergency situation, system returns to its normal operating mode.
Power-off Situation	System allows free passage (entry-exit) in both directions (fail safe). Optionally, can be set (fail secure) as; entry-exit locked, entry free-exit locked, or entry locked-exit free. Free passage in chosen direction by manual override key in fail secure option is available.
Weight	~335 kg
Optional Features and Accessories	Motor driven unit, wireless remote control (receiver-transmitter), manual control, manual override key (with fail secure option), counter (with/without reset), card reader mounting bracket, passage completion sensor, contactless passage sensor (for motorized models), heater positive, canopy, bottom plate (standard or for forklift handling), battery back-up, 316 grade stainless steel, RS232-RS485-TCP/IP modules, limiter, 2120 mm clear passage height, different color choices, compliance with UK H&S regulation of ≤98 mm gap between upright profiles.

Dimensions (mm)

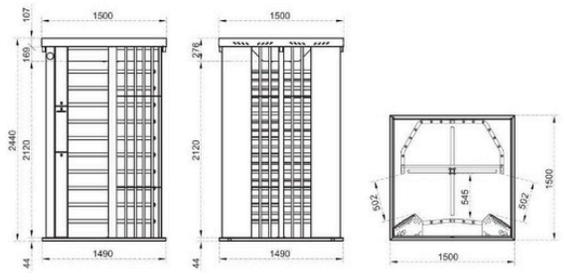

Technical Features

Place of Use	Indoors, outdoors
Operating Temperature, Humidity	-20°C/+68°C (opt. -50°C with heater positive), RH 95% non-condensing.
Operating Intensity	100%, 7/24 use.
Body / Arm Features	Consisting of floor with anti-slip aluminium coated stainless steel sub-chasis, body built on main carriers and supported with pipes and box type beams on sides, stainless steel waterproof roof covered with corrugated steel, with rain gutters and completely closed ceiling. There are columns with 3 sections designed for installation of electronic system, card reader and access control systems in both entry and exit directions. The mechanics compartment is accessible from the ceiling. Four-section rotor (90°), each having 10 one by one demountable arms. Complies with UK H&S regulation of ≤98 mm gap between upright profiles. **Body**: 304 grade (opt. 316 grade) stainless steel. **Arms**: 304 grade (opt. 316 grade)* stainless steel, Ø40x2,0 mm. (*) Finishing : Satine brushed (opt. electrostatic powder coating on stainless steel).
Indicators / Illumination	**Status - Direction Indicators** : LED, standard/LED passageway illumination standard. **Passage Indicator** : RGB LED, standard.
Power	**Operating Voltage** : 110/220V AC 50/60 Hz. (%±10), 24V DC. **Consumption** : ~8,1W at stand-by, during passage ~7,6W (varies according to the options and accessories used).
Operating Modes	System operates bi-directionally (entry-exit). Operation modes can be changed through dip switch, IOS and/or android app. Entry - exit controlled; Entry controlled, exit free; Entry free, exit controlled Single input both directions use; Entry - exit free
Operating System	Electromechanical manual operation (opt. electromechanical motorized operation).
Control System	All functions, parameters and operating modes can be changed through the control board (microprocessor controlled), IOS and/or android app. Firmware can be updated. All past function updates and changes are kept in the server and records can be traced. All inputs are opto-coupler protected. Controllable by dry contact (ground control). Compatible with all kinds of access control device. Optional RS232, RS485 or TCP/IP module is available. GET IT ON Google Play Download on the App Store
Flow Rate	**Passage capacity (manual)** : max. 48 cycle/min. **Nominal :** ~25 pass/min. **Passage capacity (motorized)** : max. 40 cycle/min. **Nominal :** ~20 pass/min. (nominal passage rate can change depending on the access control system utilized)
Emergency Mode	System allows free passage (entry-exit) in both directions (fail safe). Works compatible with fire warning and similar systems. At the end of an emergency situation, system returns to its normal operating mode.
Power-off Situation	System allows free passage (entry-exit) in both directions (fail safe). Optionally, can be set (fail secure) as; entry-exit locked, entry free-exit locked, or entry locked-exit free. Free passage in chosen direction by manual override key in fail secure option is available.
Weight	~480 kg
Optional Features and Accessories	Motor driven unit, wireless remote control (receiver-transmitter), manual control, manual override key (with fail secure option), counter (with/without reset), card reader mounting bracket, passage completion sensor, contactless passage sensor (for motorized models), heater positive, canopy, battery back-up, 316 grade stainless steel, RS232-RS485-TCP/IP modules, limiter, trombone arms, different color choices, motorized card collector unit and card collection box.

Dimensions (mm)

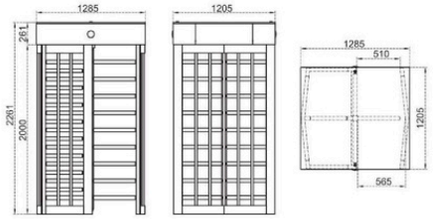

Technical Features

Place of Use	Indoors, outdoors
Operating Temperature, Humidity	-20°C/+68°C (opt. -50°C with heater positive), RH 95% non-condensing.
Operating Intensity	100%, 7/24 use.
Body / Arm Features	Built on main carriers and supported with pipe beams on sides, consisting of waterproof and protected top lid, mechanical compartment side panels and completely closed ceiling. Can be completely disassembled. Four-section rotor (90°), each having 9 (10 in optional 2120 mm clear passage height) one by one demountable arms. Optionally complies with UK H&S regulation of ≤98 mm gap between upright profiles. Combination options with different material choices:

	BT 402	BT 402-25	BT 402-100
Body	Electrostatic powder coating on hot-dip galvanized steel	Electrostatic powder coating on hot-dip galvanized steel	304 grade (opt. 316 grade) stainless steel
Arms	Electrostatic powder coating on hot-dip galvanized steel, Ø42x2,5 mm.	304 grade (opt. 316 grade)* stainless steel, Ø40x2,0 mm.	304 grade (opt. 316 grade)* stainless steel, Ø40x2,0 mm.

(*) Finishing : Satine brushed (opt. electrostatic powder coating on stainless steel).

Indicators / Illumination	**Status - Direction Indicators :** LED, standard/LED passageway illumination standard.
Power	**Operating Voltage** : 110/220V AC 50/60 Hz. (±10%), 24V DC. **Consumption** : ~8,1W at stand-by, during passage ~7,6W (varies according to the options and accessories used).
Operating Modes	System operates bi-directionally (entry-exit). Operation modes can be changed through dip switch, IOS and/or android app. Entry - exit controlled / Entry controlled, exit free / Entry free, exit controlled Single input both directions use / Entry - exit free
Operating System	Electromechanical manual operation (opt. electromechanical motorized operation).
Control System	All functions, parameters and operating modes can be changed through the control board (microprocessor controlled), IOS and/or android app. Firmware can be updated. All past function updates and changes are kept in the server and records can be traced. All inputs are opto-coupler protected. Controllable by dry contact (ground control). Compatible with all kinds of access control device. Optional RS232, RS485 or TCP/IP module is available. GET IT ON Google Play Download on the App Store
Flow Rate	**Passage capacity (manual)** : max. 48 cycle/min. **Nominal :** ~25 pass/min. **Passage capacity (motorized)** : max. 40 cycle/min. **Nominal :** ~20 pass/min. (nominal passage rate can change depending on the access control system utilized)
Emergency Mode	System allows free passage (entry-exit) in both directions (fail safe). Works compatible with fire warning and similar systems. At the end of an emergency situation, system returns to its normal operating mode.
Power-off Situation	System allows free passage (entry-exit) in both directions (fail safe). Optionally, can be set (fail secure) as; entry-exit locked, entry free-exit locked, or entry locked-exit free. Free passage in chosen direction by manual override key in fail secure option is available.
Weight	~235 kg
Optional Features and Accessories	Motor driven unit, wireless remote control (receiver-transmitter), manual control, manual override key (with fail secure option), counter (with/without reset), card reader mounting bracket, passage completion sensor, contactless passage sensor (for motorized models), heater positive, canopy, bottom plate (standard or for forklift handling), battery back-up, 316 grade stainless steel, RS232-RS485-TCP/IP modules, limiter, 2120 mm clear passage height, mechanics compartment accessibility from the ceiling, trombone arms, different color choices, comp-liance with UK H&S regulation of ≤98 mm gap between upright profiles.

Dimensions (mm)

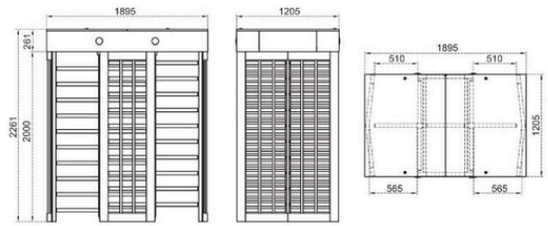

Technical Features

Place of Use	Indoors, outdoors
Operating Temperature, Humidity	-20°C/+68°C (opt. -50°C with heater positive), RH 95% non-condensing.
Operating Intensity	100%, 7/24 use.
Body / Arm Features	Built on main carriers and supported with pipe beams on sides, consisting of waterproof and protected top lid, mechanical compartment side panels and completely closed ceiling. Can be completely disassembled. A pair of four-section rotors (90°), each having 10+10 (11+11 in optional 2120 mm clear passage height) one by one demountable arms. Optionally complies with UK H&S regulation of ≤98 mm gap between upright profiles. Combination options with different material choices:

	BT 402 D	BT 402 D-25	BT 402 D-100
Body	Electrostatic powder coating on hot-dip galvanized steel	Electrostatic powder coating on hot-dip galvanized steel	304 grade (opt. 316 grade) stainless steel
Arms	Electrostatic powder coating on hot-dip galvanized steel, Ø42x2,5 mm.	304 grade (opt. 316 grade)* stainless steel, Ø40x2,0 mm.	304 grade (opt. 316 grade)* stainless steel, Ø40x2,0 mm.

(*) Finishing : Satine brushed (opt. electrostatic powder coating on stainless steel).

Indicators / Illumination	**Status - Direction Indicators :** LED, standard/LED passageway illumination standard.
Power	**Operating Voltage** : 110/220V AC 50/60 Hz. (±10%), 24V DC. **Consumption** : ~16,2W at stand-by, during passage ~7,6+7,6W (varies according to the options and accessories used).
Operating Modes	System operates bi-directionally (entry-exit). Operation modes can be changed through dip switch, IOS and/or android app. Entry - exit controlled / Entry controlled, exit free / Entry free, exit controlled Single input both directions use / Entry - exit free
Operating System	Electromechanical manual operation (opt. electromechanical motorized operation).
Control System	All functions, parameters and operating modes can be changed through the control board (microprocessor controlled), IOS and/or android app. Firmware can be updated. All past function updates and changes are kept in the server and records can be traced. All inputs are opto-coupler protected. Controllable by dry contact (ground control). Compatible with all kinds of access control device. Optional RS232, RS485 or TCP/IP module is available. GET IT ON Google Play Download on the App Store
Flow Rate	**Passage capacity (manual)** : max. 96 cycle/min. **Nominal :** ~50 pass/min. **Passage capacity (motorized)** : max. 80 cycle/min. **Nominal :** ~40 pass/min. (nominal passage rate can change depending on the access control system utilized)
Emergency Mode	System allows free passage (entry-exit) in both directions (fail safe). Works compatible with fire warning and similar systems. At the end of an emergency situation, system returns to its normal operating mode.
Power-off Situation	System allows free passage (entry-exit) in both directions (fail safe). Optionally, can be set (fail secure) as; entry-exit locked, entry free-exit locked, or entry locked-exit free. Free passage in chosen direction by manual override key in fail secure option is available.
Weight	~460 kg
Optional Features and Accessories	Motor driven unit, wireless remote control (receiver-transmitter), manual control, manual override key (with fail secure option), counter (with/without reset), card reader mounting bracket, passage completion sensor, contactless passage sensor (for motorized models), heater positive, canopy, bottom plate (standard or for forklift handling), battery back-up, 316 grade stainless steel, RS232-RS485-TCP/IP modules, limiter, 2120 mm clear passage height, mechanics compartment accessibility from the ceiling, different color choices, compliance with UK H&S regulation of ≤98 mm gap between upright profiles.

Dimensions (mm)

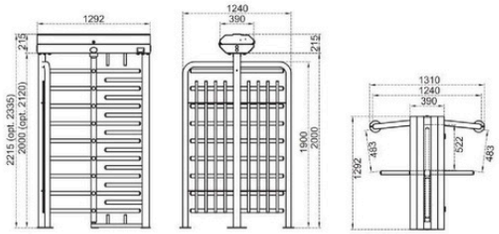

Technical Features

Place of Use	Indoors, outdoors
Operating Temperature, Humidity	-20°C/+68°C (opt. -50°C with heater positive), RH 95% non-condensing.
Operating Intensity	100%, 7/24 use.
Body / Arm Features	Built on main carriers and supported with pipe beams on sides, consisting of waterproof and protected top lid with damper for safety. Can be completely disassembled. Four-section rotor (90°), each having 9 (10 in optional 2120 mm clear passage height) one by one demountable arms. Complies with UK H&S regulation of ≤98 mm gap between upright profiles. Combination options with different material choices:

	BTX 400 N1	BTX 400 N1-25	BTX 400 N1-100
Body	Electrostatic powder coating on hot-dip galvanized steel	Electrostatic powder coating on hot-dip galvanized steel	304 grade (opt. 316 grade) stainless steel
Arms	Electrostatic powder coating on hot-dip galvanized steel, Ø42x2,5 mm.	304 grade (opt. 316 grade)* stainless steel, Ø40x2,0 mm.	304 grade (opt. 316 grade)* stainless steel, Ø40x2,0 mm.

(*) Finishing : Satine brushed (opt. electrostatic powder coating on stainless steel).

Indicators / Illumination	**Status - Direction Indicators :** LED, standard/LED passageway illumination standard.
Power	**Operating Voltage** : 110/220V AC 50/60 Hz. (±10%), 24V DC. **Consumption** : ~8,1W at stand-by, during passage ~7,6W (varies according to the options and accessories used).
Operating Modes	System operates bi-directionally (entry-exit). Operation modes can be changed through dip switch, IOS and/or android app. Entry - exit controlled / Entry controlled, exit free / Entry free, exit controlled Single input both directions use / Entry - exit free
Operating System	Electromechanical manual operation (opt. electromechanical motorized operation).
Control System	All functions, parameters and operating modes can be changed through the control board (microprocessor controlled), IOS and/or android app. Firmware can be updated. All past function updates and changes are kept in the server and records can be traced. All inputs are opto-coupler protected. Controllable by dry contact (ground control). Compatible with all kinds of access control device. Optional RS232, RS485 or TCP/IP module is available. GET IT ON Google Play Download on the App Store
Flow Rate	**Passage capacity (manual)** : max. 48 cycle/min. **Nominal :** ~25 pass/min. **Passage capacity (motorized)** : max. 40 cycle/min. **Nominal :** ~20 pass/min. (nominal passage rate can change depending on the access control system utilized)
Emergency Mode	System allows free passage (entry-exit) in both directions (fail safe). Works compatible with fire warning and similar systems. At the end of an emergency situation, system returns to its normal operating mode.
Power-off Situation	System allows free passage (entry-exit) in both directions (fail safe). Optionally, can be set (fail secure) as; entry-exit locked, entry free-exit locked, or entry locked-exit free. Free passage in chosen direction by manual override key in fail secure option is available.
Weight	~175 kg
Optional Features and Accessories	Motor driven unit, wireless remote control (receiver-transmitter), manual control, manual override key (with fail secure option), counter (with/without reset), card reader mounting bracket, passage completion sensor, contactless passage sensor (for motorized models), heater positive, canopy, bottom plate (standard or for forklift handling), battery back-up, 316 grade stainless steel, RS232-RS485-TCP/IP modules, limiter, 2120 mm clear passage height, mechanics compartment accessibility from the ceiling, trombone arms, different color choices.

Dimensions (mm)

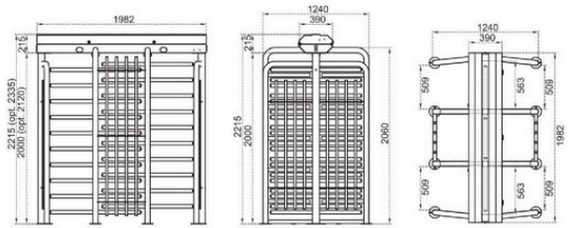

Technical Features

Place of Use	Indoors, outdoors
Operating Temperature, Humidity	-20°C/+68°C (opt. -50°C with heater positive), RH 95% non-condensing.
Operating Intensity	100%, 7/24 use.
Body / Arm Features	Built on main carriers and supported with pipe beams on sides, consisting of waterproof and protected top lid with damper for safety. Can be completely disassembled. A pair of four-section rotors (90°), each having 10+10 (11+11 in optional 2120 mm clear passage height) one by one demountable arms. Complies with UK H&S regulation of ≤98 mm gap between upright profiles. Combination options with different material choices:

	BTX 400 N1 D	BTX 400 N1 D-25	BTX 400 N1 D-100
Body	Electrostatic powder coating on hot-dip galvanized steel	Electrostatic powder coating on hot-dip galvanized steel	304 grade (opt. 316 grade) stainless steel
Arms	Electrostatic powder coating on hot-dip galvanized steel, Ø42x2,5 mm.	304 grade (opt. 316 grade)* stainless steel, Ø40x2,0 mm.	304 grade (opt. 316 grade)* stainless steel, Ø40x2,0 mm.

(*) Finishing : Satine brushed (opt. electrostatic powder coating on stainless steel).

Indicators / Illumination	**Status - Direction Indicators :** LED, standard/LED passageway illumination standard.
Power	**Operating Voltage** : 110/220V AC 50/60 Hz. (±10%), 24V DC. **Consumption** : ~16,2W at stand-by, during passage ~7,6+7,6W (varies according to the options and accessories used).
Operating Modes	System operates bi-directionally (entry-exit). Operation modes can be changed through dip switch, IOS and/or android app. Entry - exit controlled / Entry controlled, exit free / Entry free, exit controlled Single input both directions use / Entry - exit free
Operating System	Electromechanical manual operation (opt. electromechanical motorized operation).
Control System	All functions, parameters and operating modes can be changed through the control board (microprocessor controlled), IOS and/or android app. Firmware can be updated. All past function updates and changes are kept in the server and records can be traced. All inputs are opto-coupler protected. Controllable by dry contact (ground control). Compatible with all kinds of access control device. Optional RS232, RS485 or TCP/IP module is available. GET IT ON Google Play Download on the App Store
Flow Rate	**Passage capacity (manual)** : max. 96 cycle/min. **Nominal :** ~50 pass/min. **Passage capacity (motorized)** : max. 80 cycle/min. **Nominal :** ~40 pass/min. (nominal passage rate can change depending on the access control system utilized)
Emergency Mode	System allows free passage (entry-exit) in both directions (fail safe). Works compatible with fire warning and similar systems. At the end of an emergency situation, system returns to its normal operating mode.
Power-off Situation	System allows free passage (entry-exit) in both directions (fail safe). Optionally, can be set (fail secure) as; entry-exit locked, entry free-exit locked, or entry locked-exit free. Free passage in chosen direction by manual override key in fail secure option is available.
Weight	~420 kg
Optional Features and Accessories	Motor driven unit, wireless remote control (receiver-transmitter), manual control, manual override key (with fail secure option), counter (with/without reset), card reader mounting bracket, passage completion sensor, contactless passage sensor (for motorized models), heater positive, canopy, bottom plate (standard or for forklift handling), battery back-up, 316 grade stainless steel, RS232-RS485-TCP/IP modules, limiter, 2120 mm clear passage height, mechanics compartment accessibility from the ceiling, different color choices.

ULDUZLAR ARENASI SİZİ SALAMLAYIR!
TRANCE
GİRİŞ
PUBLIC ENTRAN
ÜMUMİ GİRİŞ

ULDUZLAR ARENASI SİZİ SALAMLAYIR!
ULDUZLAR ARENASI SİZİ SALAMLAYIR!
NTRANCE
LIC ENTRANCE
İ GİRİŞ
ÜMUMİ GİRİŞ

Dimensions (mm)

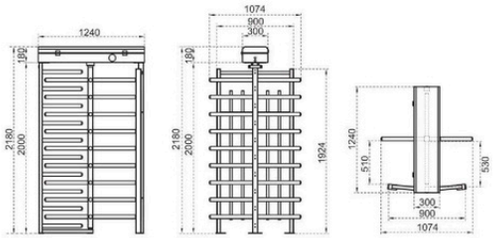

Technical Features

Place of Use	Indoors, outdoors
Operating Temperature, Humidity	-20°C/+68°C (opt. -50°C with heater positive), RH 95% non-condensing.
Operating Intensity	100%, 7/24 use.
Body / Arm Features	Built on main carriers and supported with pipe beams on sides, consisting of waterproof and protected top lid with damper for safety. Can be completely disassembled. Four-section rotor (90°), each having 9 (10 in optional 2120 mm clear passage height) one by one demountable arms. Optionally complies with UK H&S regulation of ≤98 mm gap between upright profiles. Combination options with different material choices:

	BTC 400	BTC 400-25	BTC 400-100
Body	Electrostatic powder coating on hot-dip galvanized steel	Electrostatic powder coating on hot-dip galvanized steel	304 grade (opt. 316 grade) stainless steel
Arms	Electrostatic powder coating on hot-dip galvanized steel, Ø42x2,5 mm.	304 grade (opt. 316 grade)* stainless steel, Ø40x2,0 mm.	304 grade (opt. 316 grade)* stainless steel, Ø40x2,0 mm.

(*) Finishing : Satine brushed (opt. electrostatic powder coating on stainless steel).

Indicators / Illumination	**Status - Direction Indicators :** LED, standard/LED passageway illumination standard.
Power	**Operating Voltage** : 110/220V AC 50/60 Hz. (±10%), 24V DC. **Consumption** : ~8,1W at stand-by, during passage ~7,6W (varies according to the options and accessories used).
Operating Modes	System operates bi-directionally (entry-exit). Operation modes can be changed through dip switch, IOS and/or android app. Entry - exit controlled / Entry controlled, exit free / Entry free, exit controlled Single input both directions use / Entry - exit free
Operating System	Electromechanical manual operation (opt. electromechanical motorized operation).
Control System	All functions, parameters and operating modes can be changed through the control board (microprocessor controlled), IOS and/or android app. Firmware can be updated. All past function updates and changes are kept in the server and records can be traced. All inputs are opto-coupler protected. Controllable by dry contact (ground control). Compatible with all kinds of access control device. Optional RS232, RS485 or TCP/IP module is available. GET IT ON Google Play Download on the App Store
Flow Rate	**Passage capacity (manual)** : max. 48 cycle/min. **Nominal :** ~25 pass/min. **Passage capacity (motorized)** : max. 40 cycle/min. **Nominal :** ~20 pass/min. (nominal passage rate can change depending on the access control system utilized)
Emergency Mode	System allows free passage (entry-exit) in both directions (fail safe). Works compatible with fire warning and similar systems. At the end of an emergency situation, system returns to its normal operating mode.
Power-off Situation	System allows free passage (entry-exit) in both directions (fail safe). Optionally, can be set (fail secure) as; entry-exit locked, entry free-exit locked, or entry locked-exit free. Free passage in chosen direction by manual override key in fail secure option is available.
Weight	~145 kg
Optional Features and Accessories	Motor driven unit, wireless remote control (receiver-transmitter), manual control, manual override key (with fail secure option), counter (with/without reset), card reader mounting bracket, passage completion sensor, contactless passage sensor (for motorized models), heater positive, canopy, bottom plate (standard or for forklift handling), battery back-up, 316 grade stainless steel, RS232-RS485-TCP/IP modules, limiter, 2120 mm clear passage height, trombone arms, different color choices, compliance with UK H&S regulation (≤98 mm gap between up-right profiles).

Dimensions (mm)

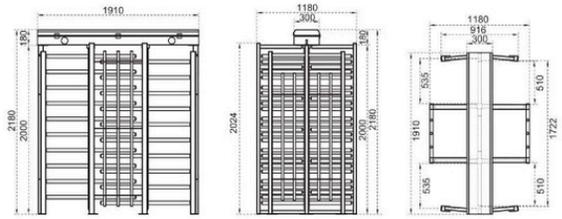

Technical Features

Place of Use	Indoors, outdoors
Operating Temperature, Humidity	-20°C/+68°C (opt. -50°C with heater positive), RH 95% non-condensing.
Operating Intensity	100%, 7/24 use.
Body / Arm Features	Built on main carriers and supported with pipe beams on sides, consisting of waterproof and protected top lid with damper for safety. Can be completely disassembled. A pair of four-section rotors (90°), each having 10+10 (11+11 in optional 2120 mm clear passage height) one by one demountable arms. Optionally complies with UK H&S regulation of ≤98 mm gap between upright profiles. Combination options with different material choices:

	BTC 400 D	BTC 400 D-25	BTC 400 D-100
Body	Electrostatic powder coating onhot-dip galvanized steel	Electrostatic powder coating on hot-dip galvanized steel	304 grade (opt. 316 grade) stainless steel
Arms	Electrostatic powder coating on hot-dip galvanized steel, Ø42x2,5 mm.	304 grade (opt. 316 grade)* stainless steel, Ø40x2,0 mm.	304 grade (opt. 316 grade)* stainless steel, Ø40x2,0 mm.

(*) Finishing : Satine brushed (opt. electrostatic powder coating on stainless steel).

Indicators / Illumination	**Status - Direction Indicators :** LED, standard/LED passageway illumination standard.
Power	**Operating Voltage** : 110/220V AC 50/60 Hz. (±10%), 24V DC. **Consumption** : ~16,2W at stand-by, during passage ~7,6+7,6W (varies according to the options and accessories used).
Operating Modes	System operates bi-directionally (entry-exit). Operation modes can be changed through dip switch, IOS and/or android app. Entry - exit controlled / Entry controlled, exit free / Entry free, exit controlled Single input both directions use / Entry - exit free
Operating System	Electromechanical manual operation (opt. electromechanical motorized operation).
Control System	All functions, parameters and operating modes can be changed through the control board (microprocessor controlled), IOS and/or android app. Firmware can be updated. All past function updates and changes are kept in the server and records can be traced. All inputs are opto-coupler protected. Controllable by dry contact (ground control). Compatible with all kinds of access control device. Optional RS232, RS485 or TCP/IP module is available. GET IT ON Google Play Download on the App Store
Flow Rate	**Passage capacity (manual)** : max. 96 cycle/min. **Nominal :** ~50 pass/min. **Passage capacity (motorized)** : max. 80 cycle/min. **Nominal :** ~40 pass/min. (nominal passage rate can change depending on the access control system utilized)
Emergency Mode	System allows free passage (entry-exit) in both directions (fail safe). Works compatible with fire warning and similar systems. At the end of an emergency situation, system returns to its normal operating mode.
Power-off Situation	System allows free passage (entry-exit) in both directions (fail safe). Optionally, can be set (fail secure) as; entry-exit locked, entry free-exit locked, or entry locked-exit free. Free passage in chosen direction by manual override key in fail secure option is available.
Weight	~345 kg
Optional Features and Accessories	Motor driven unit, wireless remote control (receiver-transmitter), manual control, manual override key (with fail secure option), counter (with/without reset), card reader mounting bracket, passage completion sensor, contactless passage sensor (for motorized models), heater positive, canopy, bottom plate (standard or for forklift handling), battery back-up, 316 grade stainless steel, RS232-RS485-TCP/IP modules, limiter, 2120 mm clear passage height, different color choices, compliance with UK H&S regulation of ≤98 mm gap between upright profiles.

Dimensions (mm)

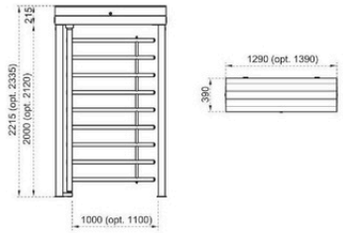

Technical Features

Place of Use	Indoors, outdoors
Operating Temperature, Humidity	-20°C/+68°C (opt. -50°C with heater positive), RH 95% non-condensing.
Operating Intensity	100%, 7/24 use.
Body / Arm Features	Built on box beam main carriers and consisting of waterproof and protected top lid with damper for safety. Can be completely disassembled. Single-section rotor having 9 (10 in optional 2120 mm clear passage height) one by one demountable arms. Combination options with different material choices:

	BT 100	BT 100-25	BT 100-100
Body	Electrostatic powder coating on hot-dip galvanized steel	Electrostatic powder coating on hot-dip galvanized steel	304 grade (opt. 316 grade) stainless steel
Arms	Electrostatic powder coating on hot-dip galvanized steel, Ø42x2,5 mm.	304 grade (opt. 316 grade)* stainless steel, Ø40x2,0 mm.	304 grade (opt. 316 grade)* stainless steel, Ø40x2,0 mm.

(*) Finishing : Satine brushed (opt. electrostatic powder coating on stainless steel).

Indicators / Illumination	**Status - Direction Indicators :** LED, standard/LED passageway illumination standard.
Power	**Operating Voltage** : 110/220V AC 50/60 Hz. (%±10), 24V DC. **Consumption** : ~8W at stand-by, max ~44W (varies according to the options and accessories used).
Operating Modes	System operates bi-directionally (entry-exit). Operation modes can be changed through dip switch, IOS and/or android app. Entry - exit controlled Entry - exit free (with optional photocell support) Entry controlled, exit free (with optional photocell support) Entry free, exit controlled (with optional photocell support)
Operating System	Electromechanical motorized operation.
Control System	All functions, parameters and operating modes can be changed through the control board (microprocessor controlled), IOS and/or android app. Firmware can be updated. All past function updates and changes are kept in the server and records can be traced. All inputs are opto-coupler protected. Controllable by dry contact (ground control). Compatible with all kinds of access control device. Optional RS232, RS485 or TCP/IP module is available. GET IT ON Google Play Download on the App Store
Flow Rate	Wing opening/closing time : ~1,5 sec.
Emergency Mode	System provides a free passageway (entry-exit) by opening the wing in preferred direction configured by dip switch (fail safe). Works compatible with fire warning and similar systems. At the end of an emergency situation, system returns to its normal operating mode.
Power-off Situation	System provides a free passageway (entry-exit) by manually pushing the wing towards entry or exit directions (fail safe). Optionally, can be set as entry-exit locked (fail secure). Free passageway can be granted by manual override key in fail secure option.
Weight	~105 kg
Optional Features and Accessories	Wireless remote control (receiver-transmitter), manual control, manual override key (with fail secure option), counter (with/without reset), card reader mounting bracket, heater positive, canopy, bottom plate (standard or for forklift handling), battery back-up, 316 grade stainless steel, RS232-RS485-TCP/IP modules, limiter, 2120 mm clear passage height, 900-1100 mm clear passage width, trombone arms, photocell for free mode, different color choices.

Kontakt

legisistem

www.legi.rs

legisistem

LegiSistem

Beograd-Rušanj, Kolubarska 1/1

email: komercijala@legi.rs